Herbert Wertheim College of Engineering
UNIVERSITY of FLORIDA

EIN 4360 Facilities Planning and Material Handling

Module 13– Project Management

Nicolas Grimaldi

E-mail: n.grimaldi@ufl.edu

Office: Weil 401

POWERING THE NEW ENGINEER TO TRANSFORM THE FUTURE

Project Management

- **Time is Money**
- **Project:** A **temporary endeavor** undertaken to create a unique product or service
- **Project management:** Process that organized a project and should be learned and understood by every level of the organization.
- It is essential to understand the process, techniques and tools of defining a project based on the cost of the time it will take to produce the overall deliverable of the project.

Project Management

Project management entails five sub processes:

1. **Define the scope (initiate):**
   - Where decisions are made about customers' needs.
   - What is in the **SCOPE** of the project and what is not.

2. **Planning process:**
   - Determining the **best method** of accomplishing the work in time for the customer to use the deliverable.
   - Determining the **quantity of resources** to be used and their **scheduling** to ensure completion of the project given the **constraints**.

Project Management

3. Executive process:

- Where the work gets done.

4. Controlling process:

- Establishes a guidance system for the performance of the work in terms of both time and cost.

5. Closing process:

- Puts accomplishments on the shelf and analyzes them for lessons learned and their usefulness in the future.

Fundamental of Project Management

The key to be able to control the cost and schedule is to have a plan that:

- balances the **scope of the deliverable** with the **customers' budget.**
- has the **right resources** assigned at the **right time** to perform all the work in time for the customer to be able to use the **deliverable**.
- This is called **triple constraint**. (**Time, Budget, Scope**)

The triple constraint must be **balanced during the initiation** and **planning** processes if the cost and schedule of the project are **to be controlled through the execution** and closeout process.

Project Management-Work Breakdown Structure (WBS)

The one binding tool through the process of cost and schedule control is the deliverable-oriented **WBS**.

WBS is built by breaking down the deliverable into **distinct activities / individual work elements** that take time and effort to accomplish during the initiation and planning process.

- The time required to complete each work item will become part of the schedule.
- The schedule will then be used to plan how each of these work items need to be accomplished during the planning process.

WBS/schedule **shows the progress of the project during the execution** process. WBS also presents the information for performing the analysis that help us control the work items during the controlling process.

Project Management-Work Breakdown Structure

The degree to which the individual work elements need to be broken down before a planning network can be drawn will have to be decided by the project manager.

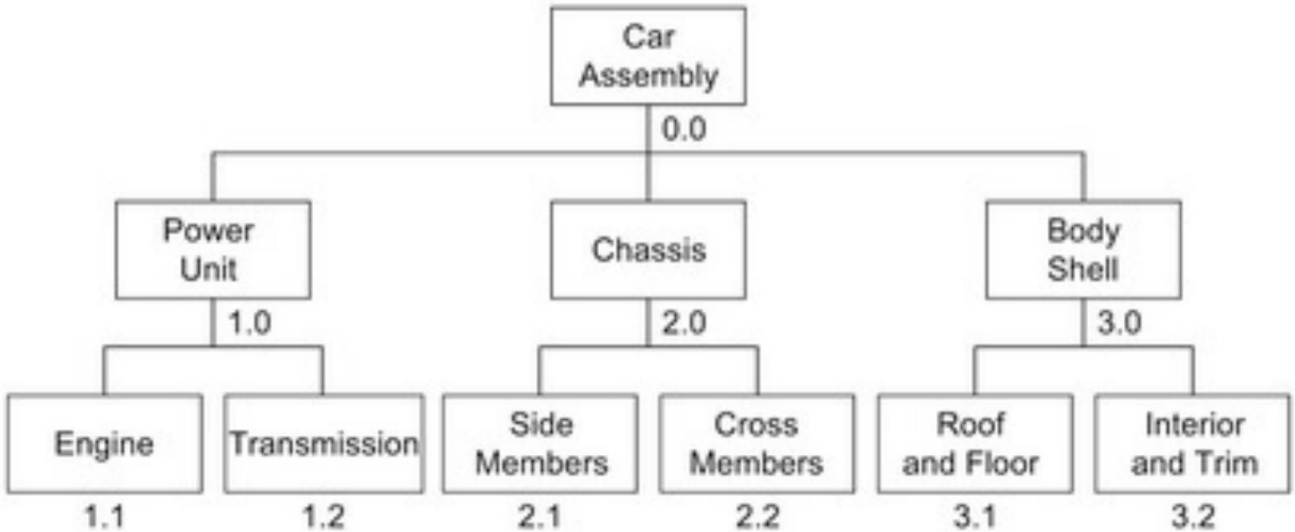

Fundamentals of Project Management

The primary activities of project management are: Planning, Scheduling, and Controlling.

Initial Planning involves:

- Breaking the project down into distinct activities.
- Assigning known or estimated completion times to each activity
- Identifying any logical relationships that exist between the activities.
- Draw up a schedule to minimize completion time.

Scheduling activities involves:

- Assigning the necessary resources and a start time to each activity.

Controlling involves:

- Monitoring project progress against the plan.
- Take corrective action where necessary, including altering the current plan and rescheduling and reallocate money or resources to improve scheduling.

Examples of Projects

- Construction of a highway
- Planning and launching a new product
- Automobile model changeover
- Scheduling maintenance and repair
- Producing a movie
- Planning, scheduling, … of DWTS.

Project Management Tools

- Gantt Charts
- CPM/PERT
  - **CPM:** Critical path model
  - **PERT:** Program evaluation and review technique

Project Management Tools

Gantt Charts: A general form of scheduling tool and specific form of project management control activity. Horizontal axis represents units of time e.g. days, weeks, months, …. and vertical axis shows activities/tasks.

Advantages of Gantt Charts:

- Simplicity
- Easy for end users to understand

Disadvantages of Gantt Charts:

- Does not show task dependencies

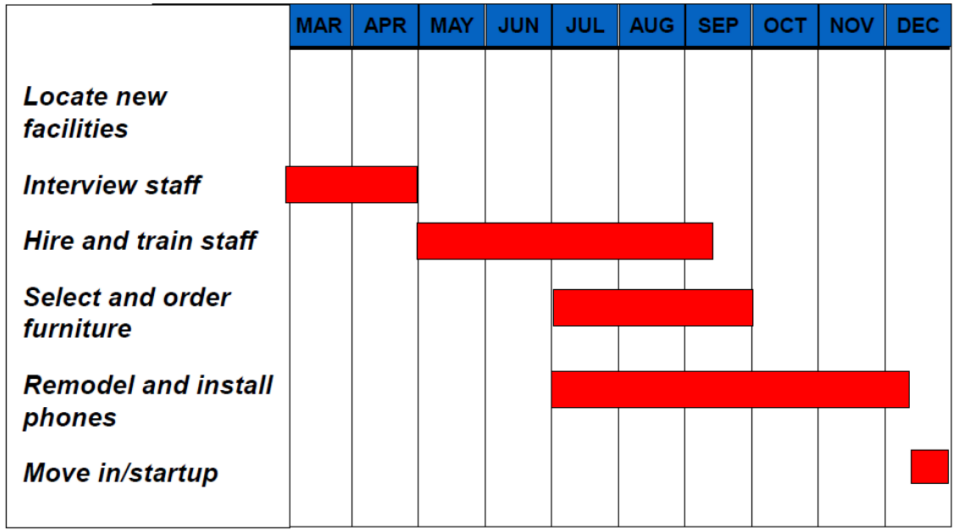

Project Management Tools

Design Structure Matrix: Shows the corresponding dependencies and connections patterns between events/activities or entities. We've seen a number of different DSMs (adjacency matrices, from-to charts, etc.)

Advantages of DSMs:

- Quickly see connections between a large set of items.
- Can show feedback loops and other types of precedence structures.
- Can use clustering algorithms.

	A	B	C	D	E	F	G
Element A	A	1				1	
Element B		B		1			
Element C	1		C				1
Element D				D	1		
Element E		1			E	1	
Element F			1			F	
Element G	1				1		G

Project Management- Network/PERT Diagram

Network analysis consists of two basic operations:

- Drawing the network and estimating the individual activity times
- Analyzing these times to **find the critical activities** and the amount of float in the non-critical ones

Basically, the network is a flow diagram showing the sequence of operations of a process.

Each individual operation is known as an activity.
We can describe the activity in two ways:

- Activity title (A)
- Starting and finishing event nodes 1 to 2.

Precedence Relationships

The Network Diagram below represents the sequence that activity D cannot start until activity C is completed and that activity C cannot start until both activities A and B are completed.

You should not have a cycle in your diagram. This means that either your network diagram is misspecified or that your analysis of the precedence relationships among activities is logically incorrect.

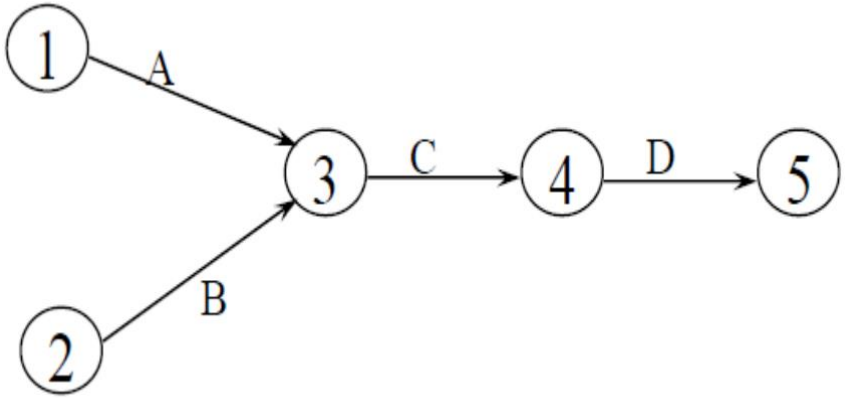

Project Management- Precedence Diagram

Some planners prefer to show the interrelationship of activities by using the **node** to represent the activities rather than the edges. The network produced in this manner is called an **Activity Network Diagram, Precedence Diagram, or Activity-on-node diagram.**

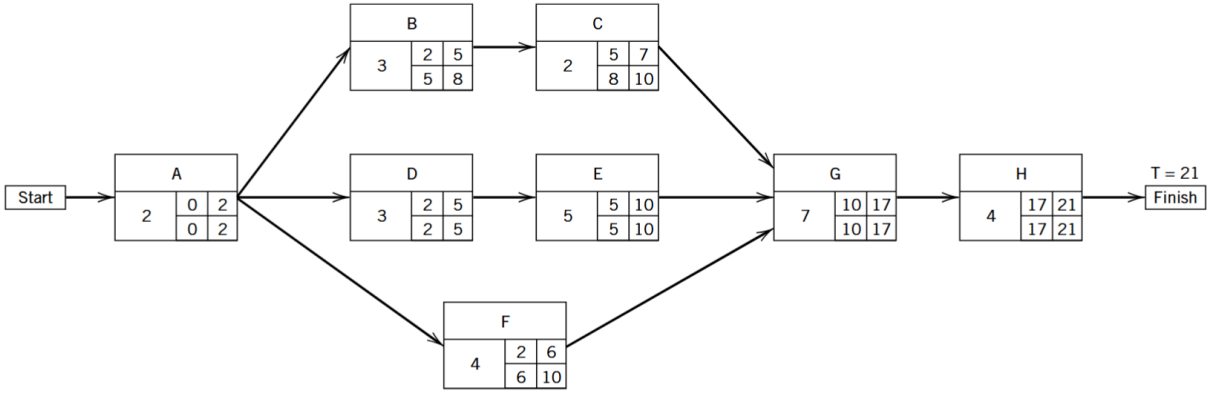

Legend

A: Schedule shutdown periods for equipment movement and installation
B: Interview, evaluate, select, and hire new employees
C: Train new employees
D: Interview, evaluate, and select equipment vendors
E: Order equipment
F: Interview, evaluate, select, and hire construction contractors
G: Meet to review installation plan (facilities design team, contractors, new employees, vendor representatives, and management)
H: Executive installation plan and test system

Activity		
Di	ES	EF
	LS	LF

Di : Activity duration
ES: Early start
EF: Early finish
LS: Late start
LF: Late finish

Figure 2.23 Activity network diagram example for a production line expansion facilities design project.

Project Management-Precedence Diagram

The nodes (boxes) typically show the following elements:

- **Activity durations (D)**
- **Earliest and latest starting** (ES and LS) and **finish times** (EF and LF)
  - *Early Finish = Early start + Duration*
  - *Late Start = Late Finish – Duration*
- **Float**/slack: the amount of time a task can be delayed before it impacts the final deliverable deadline.

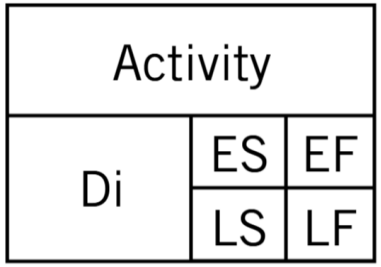

Di : Activity duration
ES: Early start
EF: Early finish
LS: Late start
LF: Late finish

Activity Network Diagram

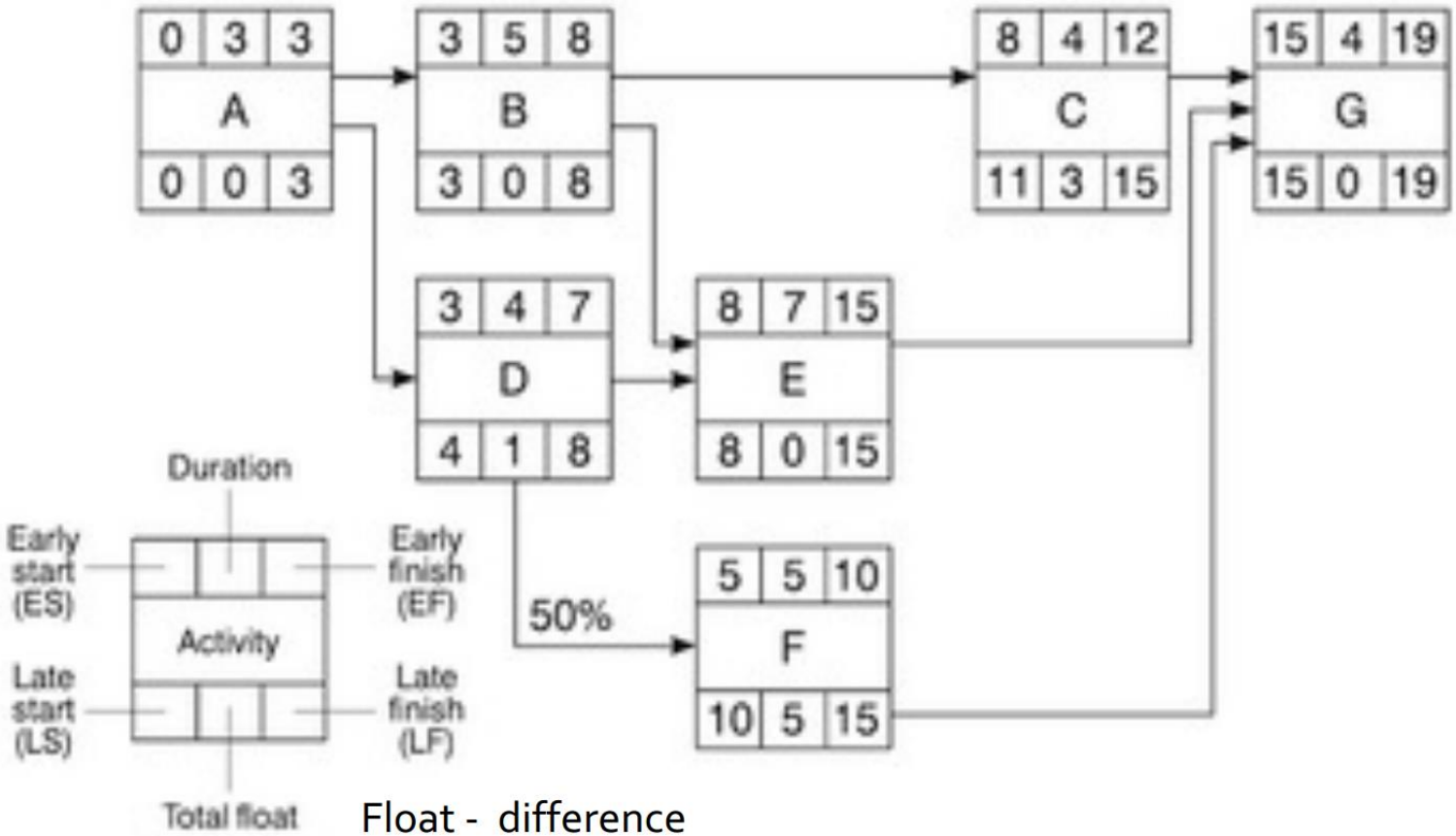

Float - difference in the ES and LS

Program Evaluation and Review Technique (PERT)

A statistical tool developed by the United States Navy for project management.

Used with the **Critical Path Method** (CPM) to help with scheduling and resource allocation.

- **Critical Path**: The longest path (duration) through the network and any delays on this path will result in a delay to the final completion of the project.

Helps identify the **minimum time** needed to complete a project, as well as incorporating the **uncertainty** (e.g., early and late start times) that occurs during a project.

PERT Steps

1. **Define** the project and all of its significant activities or tasks
2. Identify **precedence relationships** among the activities
3. Draw the **network** connecting all of the activities
4. Assign **time and cost** estimates to each activity
5. Compute the **critical path** through the network.
6. Use the network to help **plan, schedule, monitor, and control** the project

Project Network Convention

- *Solid-line* arcs represent **real activities**
- *Dashed-line* arcs represent **dummy activities**
- Dummy activities are used solely to get correct precedence relationships
  - Dummy activities always have zero time
  - Each activity must be uniquely defined by its beginning and end point
- *Nodes* represent **events**
  - Nodes are not numbered until after the project network is completed
  - Nodes are numbered so that arcs go from lower to higher numbers

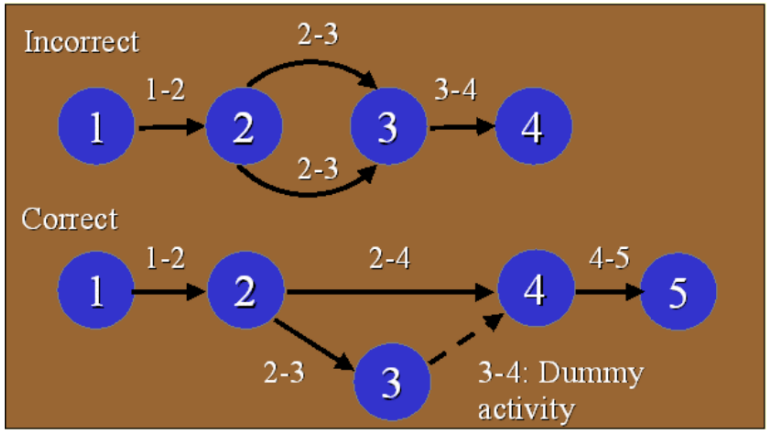

Network Construction Rules

- No activity can begin until all activities proceeding it are completed
- An arc implies precedence only
- Two events can be directly connected by at most one activity (at most one arc between two nodes, need to use dummy activities otherwise)
- Different events must have different numbers
- The network must have exactly one initial event, and exactly one terminal event

Critical Path

- The time between the earliest time and the latest time an activity can begin is called the slack time for an activity
- Activities which do not have any slack (their slack time equals zero) are called critical activities and lie on the critical path of the project.
- Delay in any of the critical activities results in delaying project's completion time.

PERT Example

- Installing air pollution control equipment requires the following activities:

Activity	Description	Duration (days)	Predecessors
A	Build internal components	2	None
B	Modify roof & floor	3	None
C	Construct collection stack	2	A
D	Pour concrete & install frame	4	B
E	Build high-temperature burner	4	C
F	Install control system	3	C
G	Install air pollution device	5	D, E
H	Inspection & testing	2	F, G

PERT Example

Activity	Time	Predecessor	Activity	Time	Predecessor
A	2	none	E	4	C
B	3	none	F	3	C
C	2	A	G	5	D,E
D	4	B	H	2	F,G

PERT Example

Activity	Time	Predecessor	Activity	Time	Predecessor
A	2	none	E	4	C
B	3	none	F	3	C
C	2	A	G	5	D,E
D	4	B	H	2	F,G

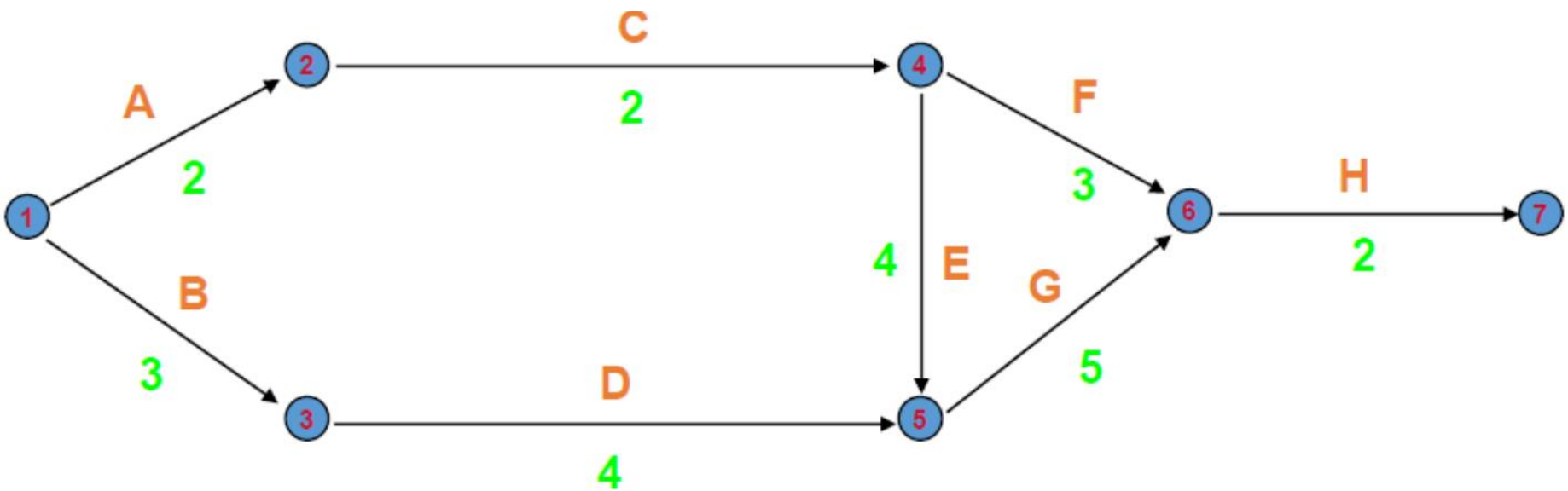

PERT Example- Earliest Times

- **Forward pass** allows to calculate **earliest start** and **earliest finish** times for each activity.
- The **earliest start** time is defined as the **largest** of the **earliest finish** times for all activities entering the node.
- The **earliest finish** time is defined as the **earliest start** time plus **activity time**

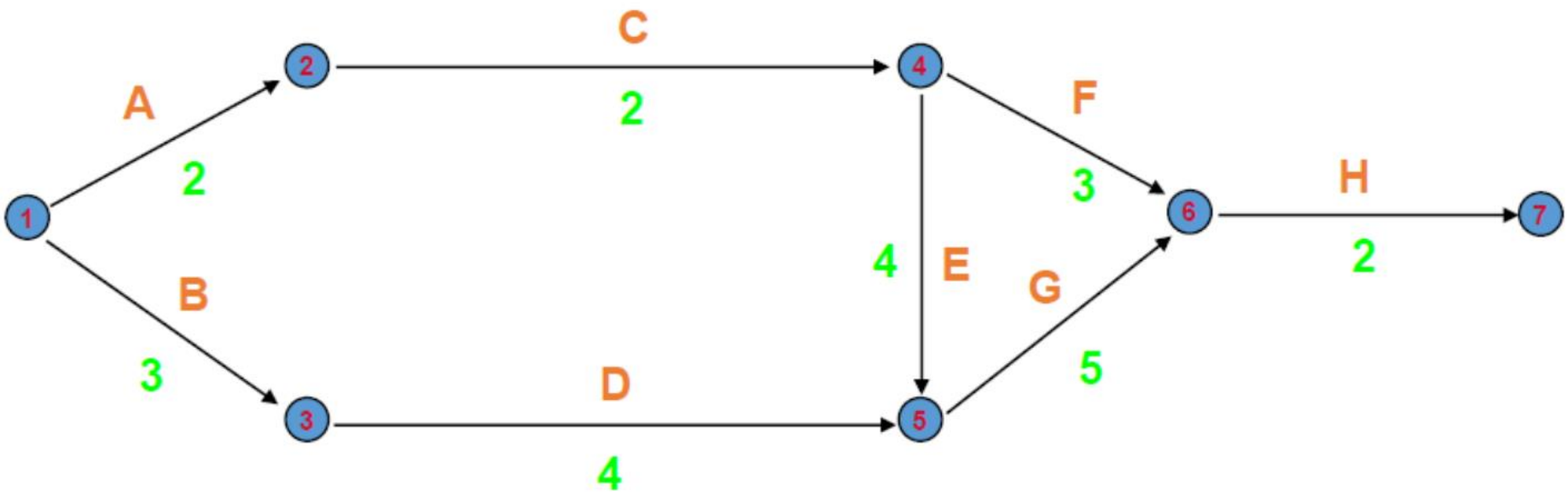

PERT Example- Earliest Times

- **Forward pass** allows to calculate **earliest start** and **earliest finish** times for each activity.
- The **earliest start** time is defined as the **largest** of the **earliest finish** times for all activities entering the node.
- The **earliest finish** time is defined as the **earliest start** time plus **activity time**

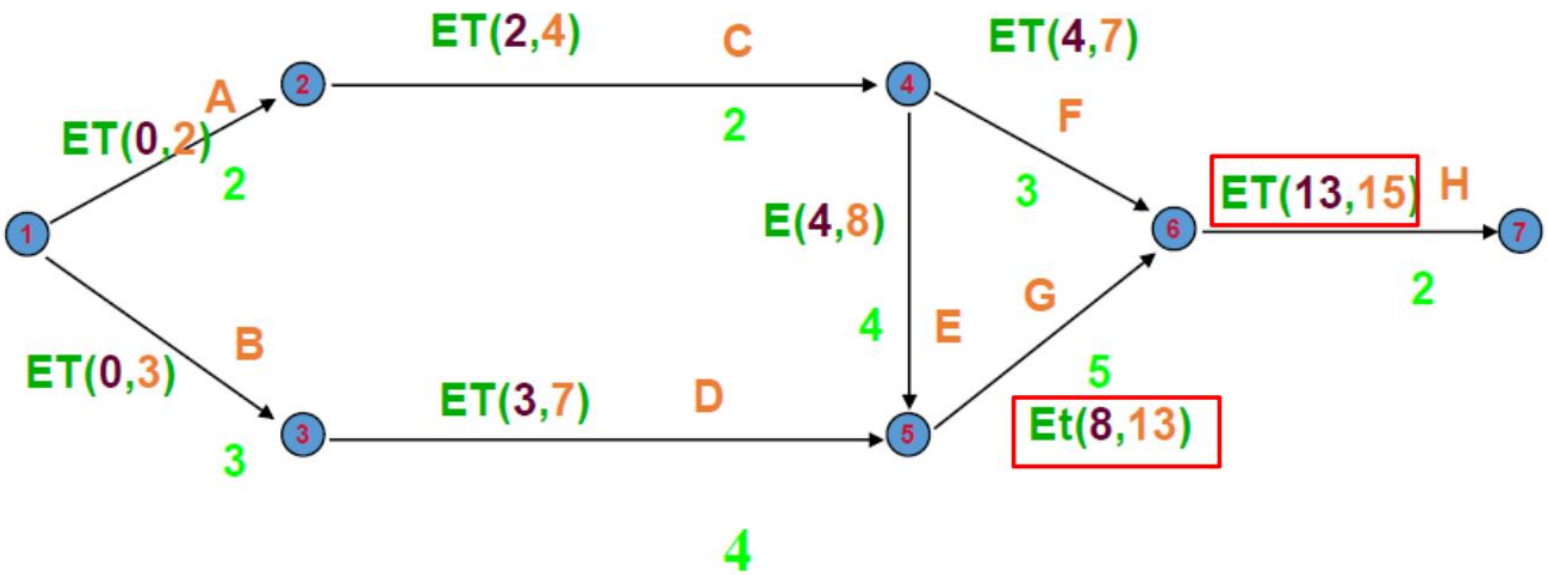

PERT Example- Latest Times

- **Backward pass** allows to calculate **latest start** and **latest finish** times for each activity.
- The **latest finish** time is defined as the **smallest** of the **latest start** times for all activities leaving the node.
- The **latest start** time is defined as the **latest finish** time minus **activity time**

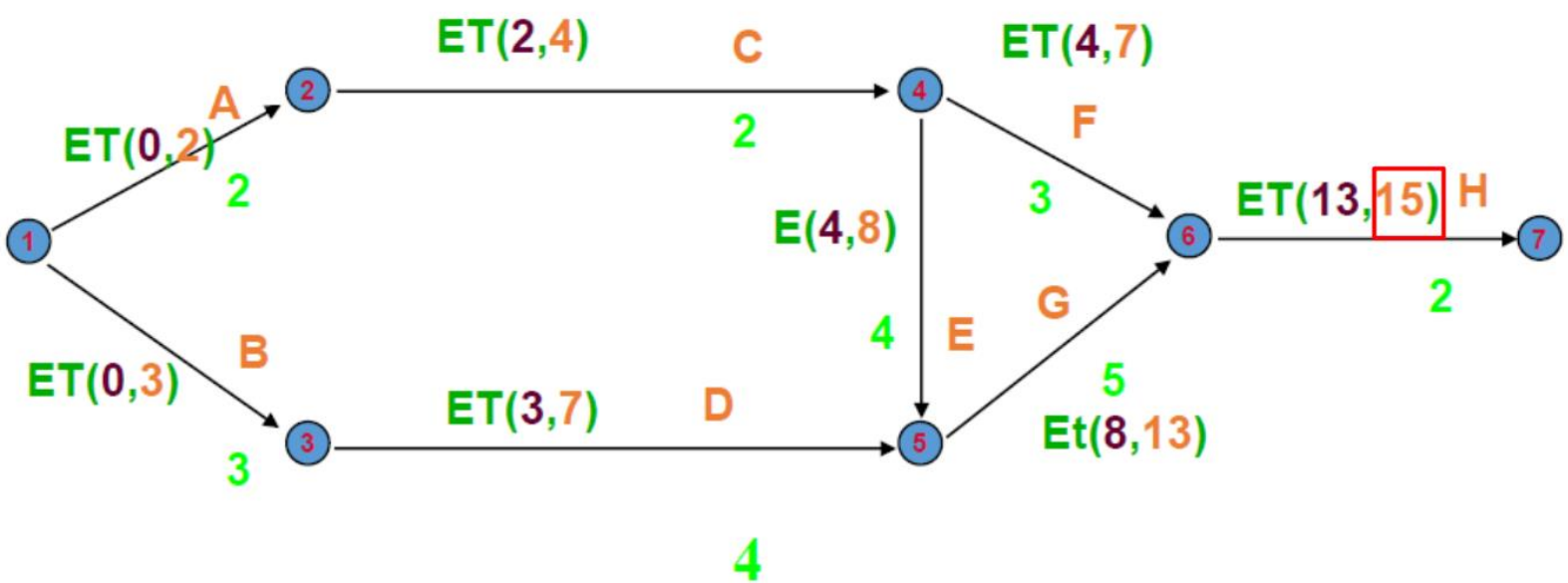

PERT Example- Latest Times

- **Backward pass** allows to calculate **latest start** and **latest finish** times for each activity.
- The **latest finish** time is defined as the **smallest** of the **latest start** times for all activities leaving the node.
- The **latest start** time is defined as the **latest finish** time minus **activity time**

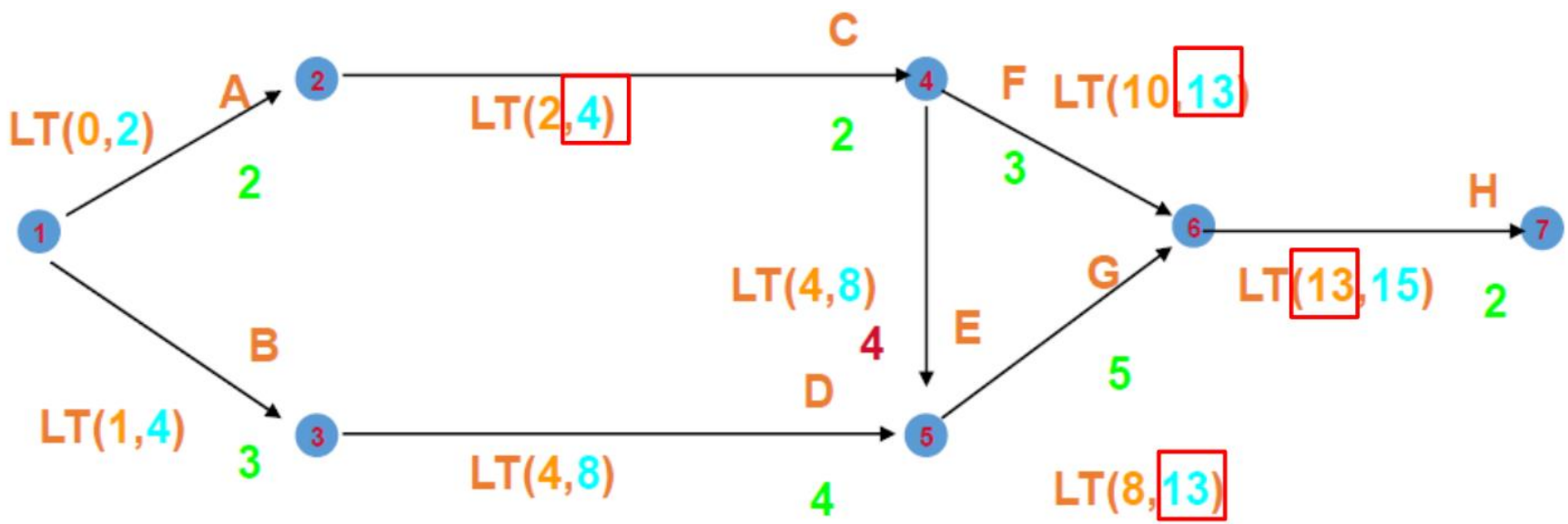

PERT Example- Latest Times

- For each activity calculate slack (difference between the latest start/finish and the earliest start/finish). The critical path, indicates by → is composed of the activities with 0 slack.

PERT Example- Latest Times

- For each activity calculate slack (difference between the latest start/finish and the earliest start/finish). The critical path, indicates by → is composed of the activities with 0 slack.

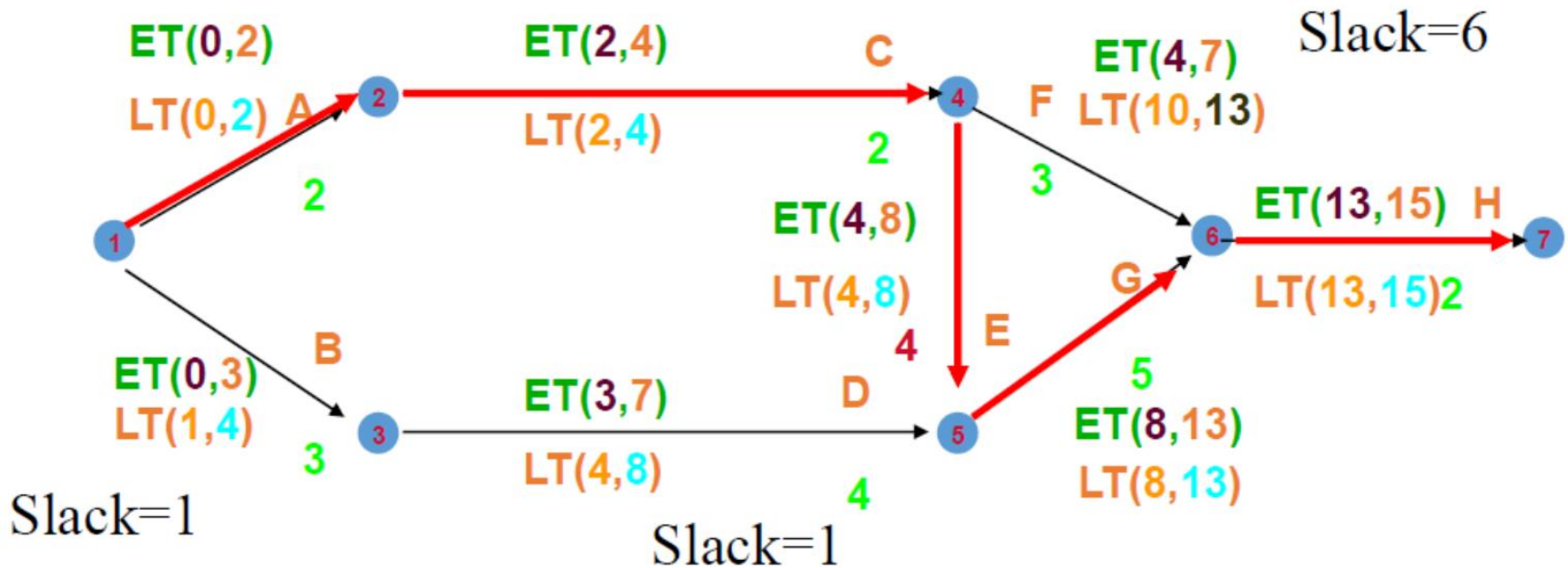

Conclusions of PERT

- Calculate **Event Time Slack** – delay in the start time of the event that can occur
  - Tolerable delay in start = latest - earliest event time
  - Activities on the CP = 0
- Calculate **Activity Time Slack** – the delay in the time that it can take to complete an activity
  - Tolerable delay in activity completion = latest start time for event j - (earliest start time for event i + activity time)
- Identify **Critical path**
  - Minimum project completion time estimate
  - Made of all activities and events with zero slack
- Make recommendations for improving project time